REVISIONS				
ZONE	REV	DESCRIPTION	DATE	APPROVED
	A	WAS 46019	19OCT98	
	B	WAS DWG NO 40860	15OCT03	

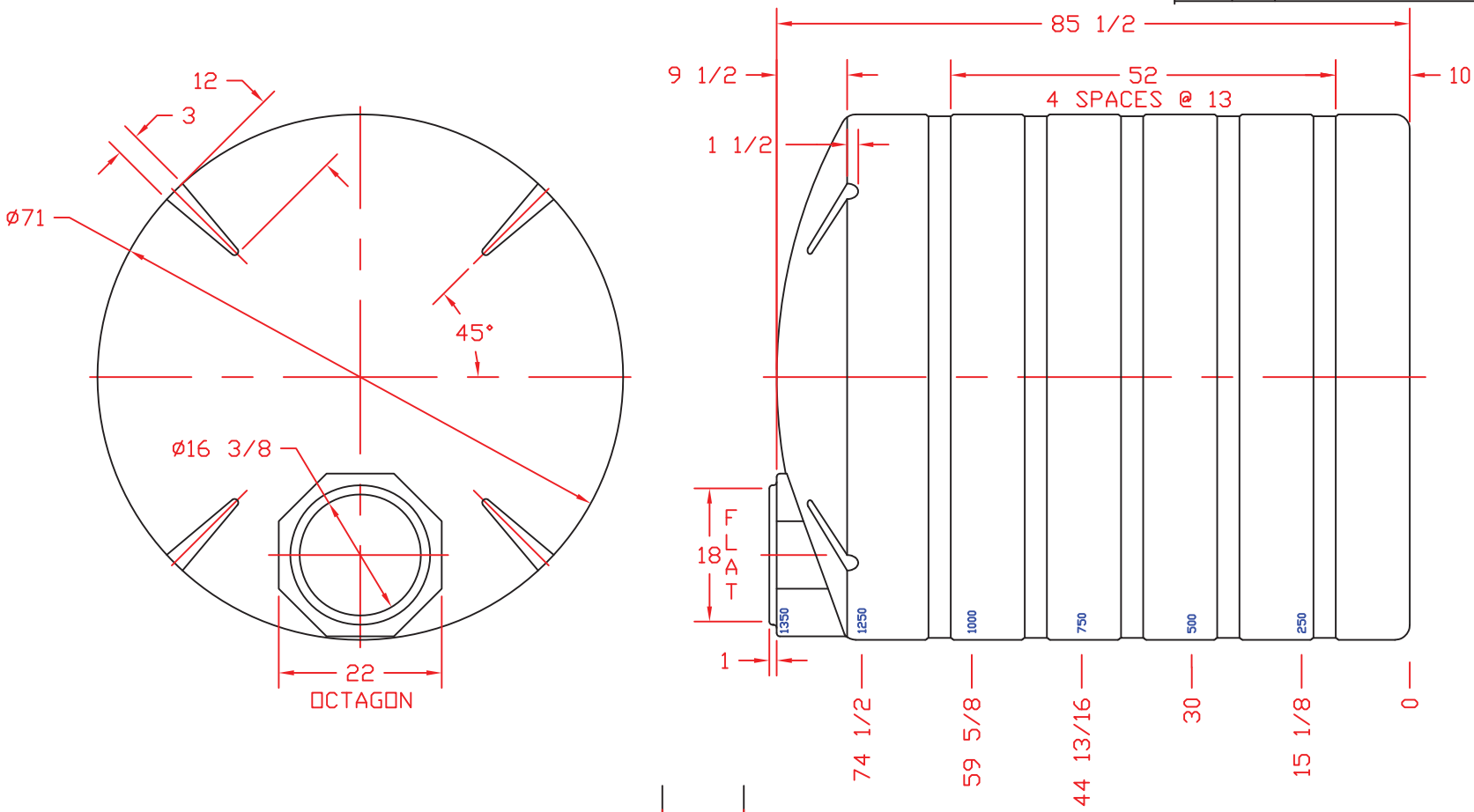

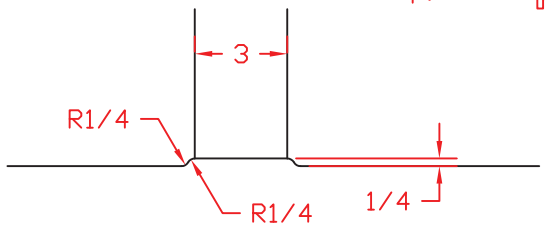

RIB DETAIL, 1/4 SCALE

NORWESCO
ST. BONIFACIUS, MN

1350 GALLON
VERTICAL TANK

JTP 17JAN96	SIZE B	FSCM NO.	DWG NO. (B)(A)	REV B
	SCALE 1/16		SHEET	