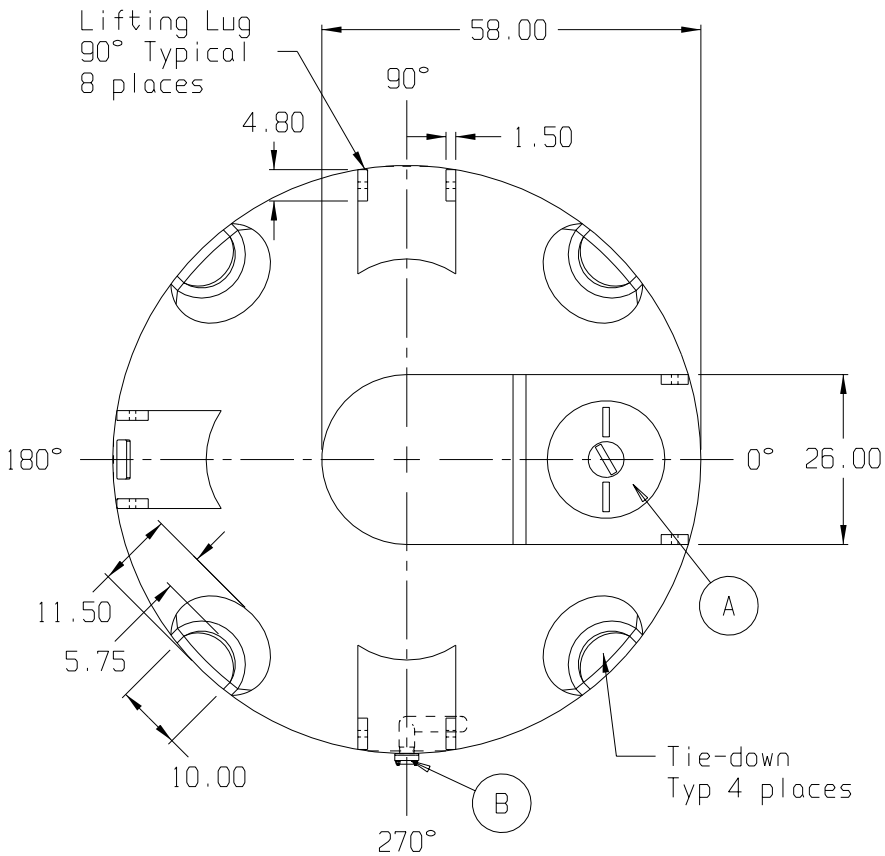

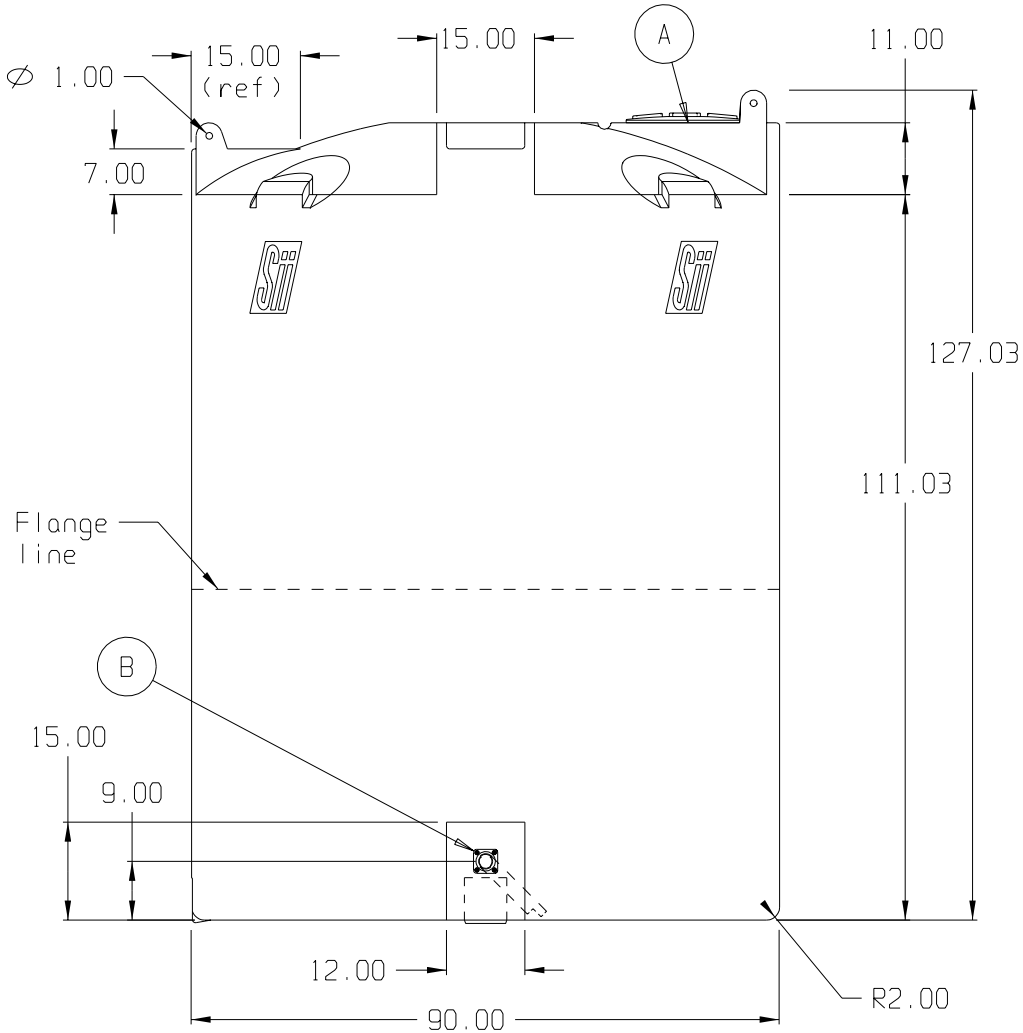

STANDARD OUTLET SPECIFICATION * N2 *

A. 18" PE THREADED-VENTED MANWAY W/15" ACCESS [P/N 343012]
B. 2" PP/PE BOLTED FTG SIPHON TUBE ASSY W/EPDM GASKETS & SS BOLTS [P/N 347841]

(all dimensions in inches)

BASE FITTINGS TO BE LEFT INSTALLED AT TIME OF SHIPMENT PER Sii PROCEDURE

PART # TANK: 5130--L

3,000 GALLON FLAT BOTTOM TANK

REF#: 0000

06/27/02

SNYDER INDUSTRIES INC.