REVISIONS				
ZONE	REV	DESCRIPTION	DATE	APPROVED

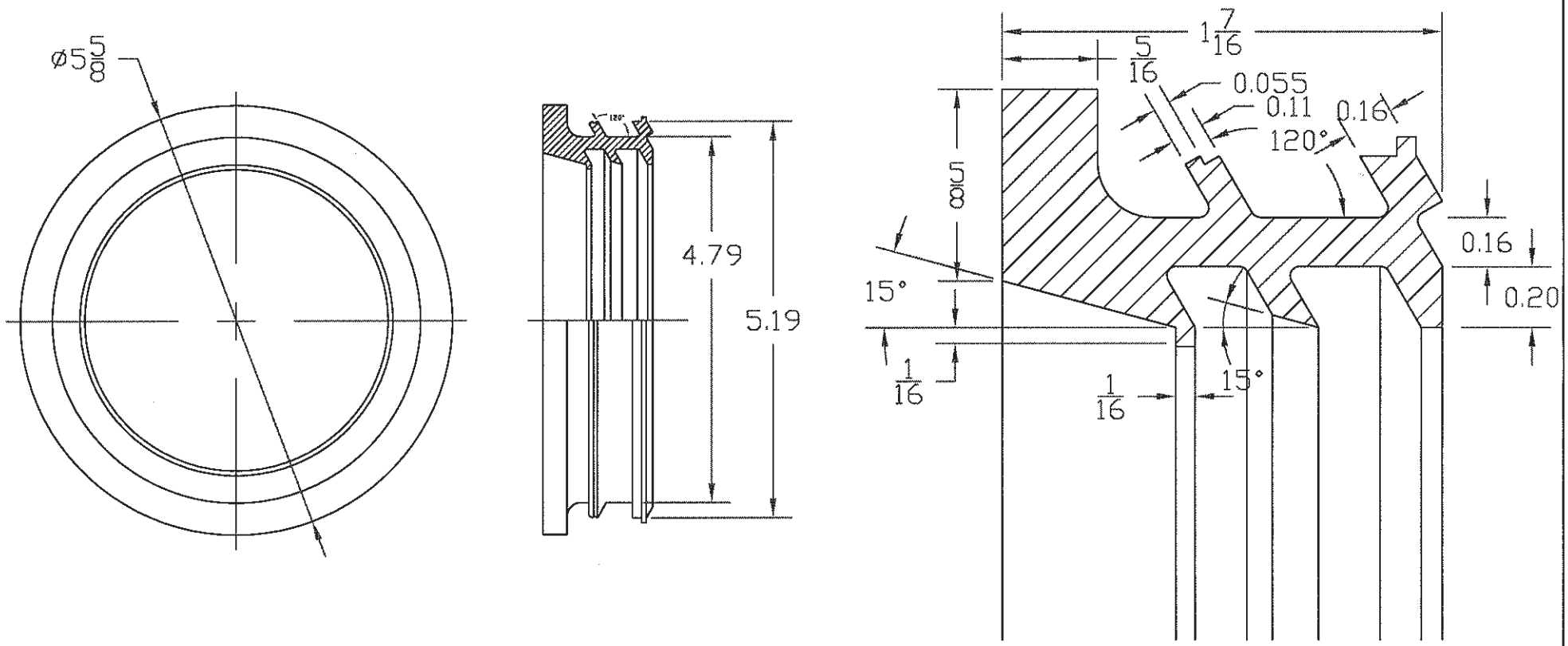

COMPONENT OF 61762 & 61763 TEE
& GASKET KITS

NORWESCO
ST. BONIFACIUS, MN

SEPTIC GASKET

JTP 27JAN03	SIZE A	FSCM NO.	DWG NO. 60352	REV
	SCALE 1/2		SHEET	