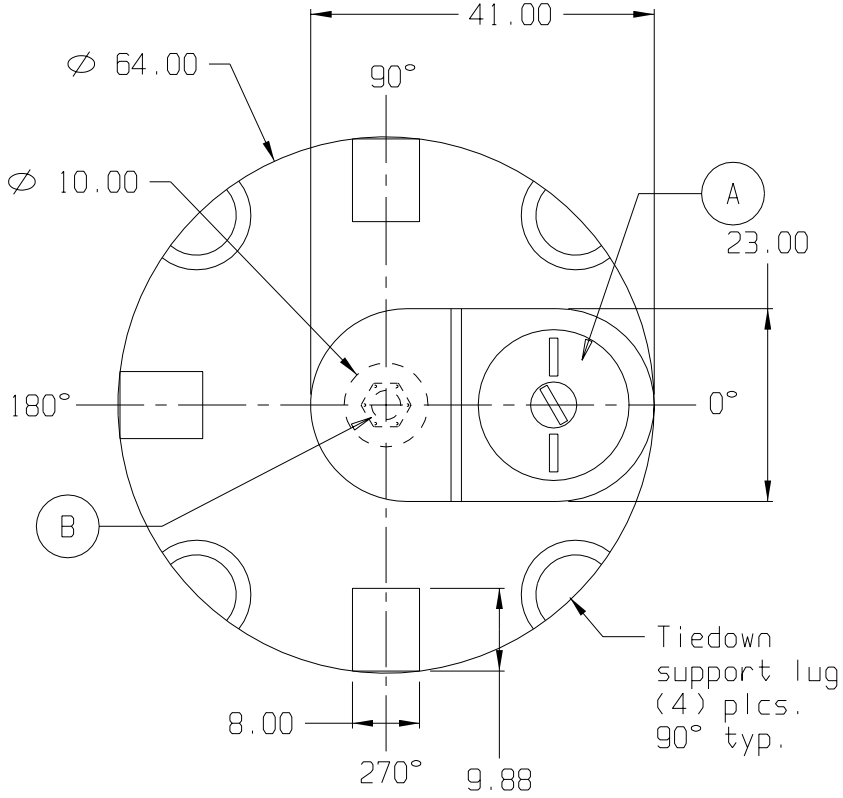

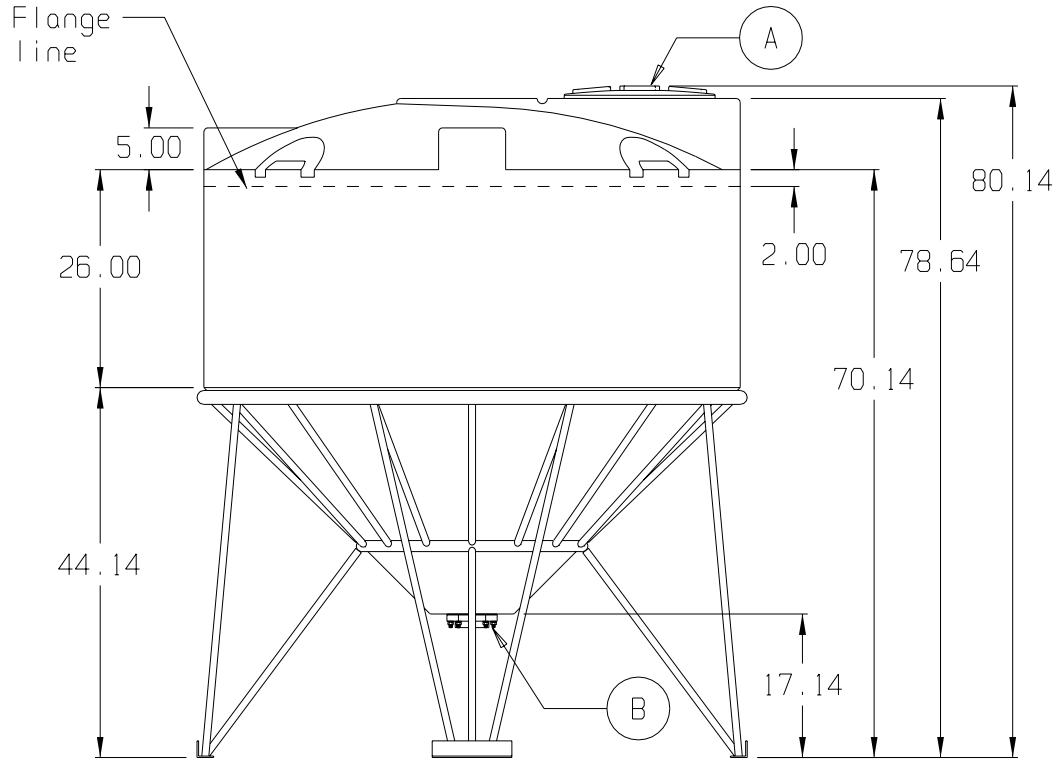

STANDARD OUTLET SPECIFICATION * ▯ *

A. 18" PE THREADED-VENTED MANWAY W/15" ACCESS [P/N 343012]
B. 3" PP DBL FLANGED BOLTED FTG W/EPDM GASKETS & SS BOLTS [P/N 341105]

BASE FITTINGS TO BE LEFT INSTALLED AT TIME OF SHIPMENT PER SII PROCEDURE

(all dimensions in inches)

PART # TANK: 619--
STAND: 78800

500 GALLON 45° CONE BOTTOM TANK W/STAND

REF#: 0000

12/05/02

SNYDER INDUSTRIES INC.