ZONE	REV	DESCRIPTION	DATE	APPROVED
	A	BAND WAS 1-PC, (2) REQ	26APR02	
	B	BAND REVISED & REDRAWN	08APR09	

PAINT BLACK

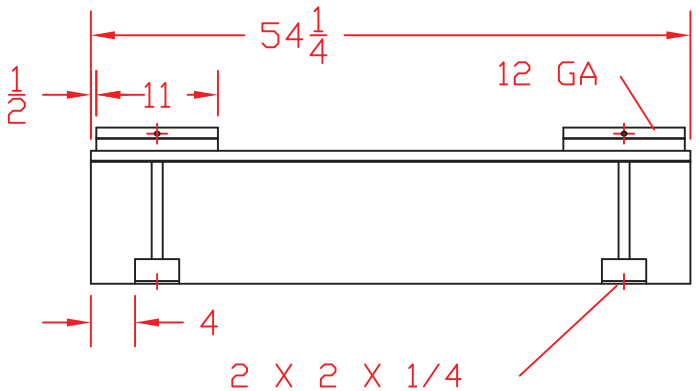

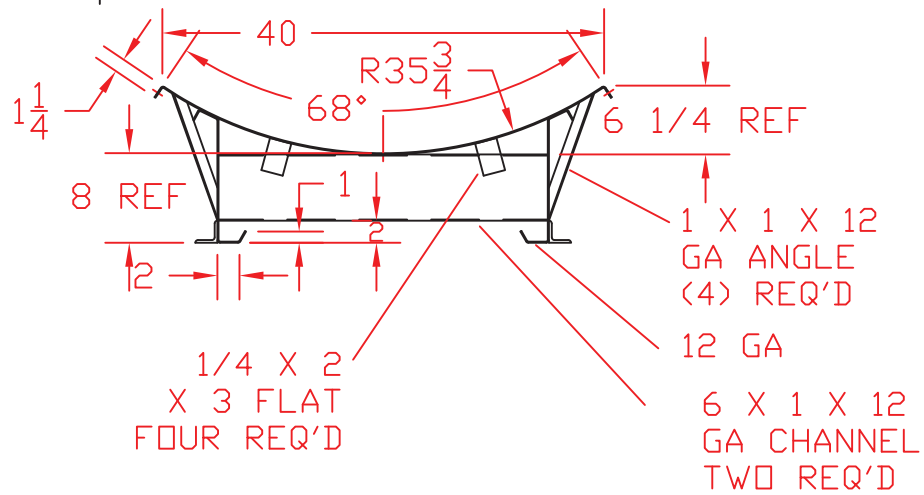

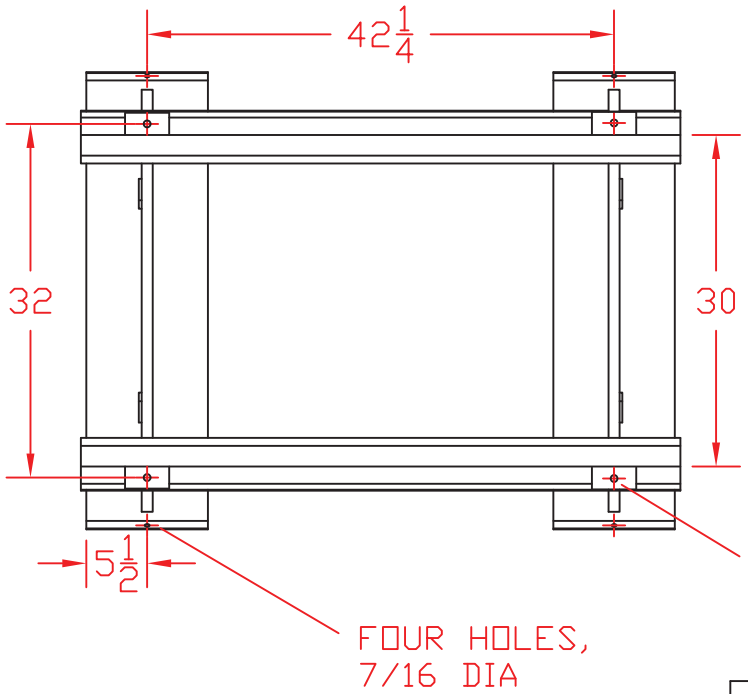

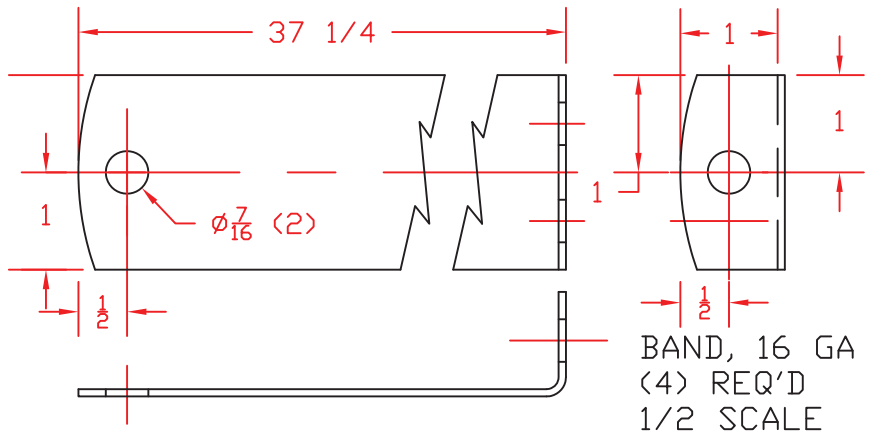

NORWESCO
ST. BONIFACIUS, MN

300 ELLIPTICAL SKID

JTP 11SEP01	SIZE A	FSCM NO.	DWG NO.	REV B
	SCALE 1/16		SHEET	