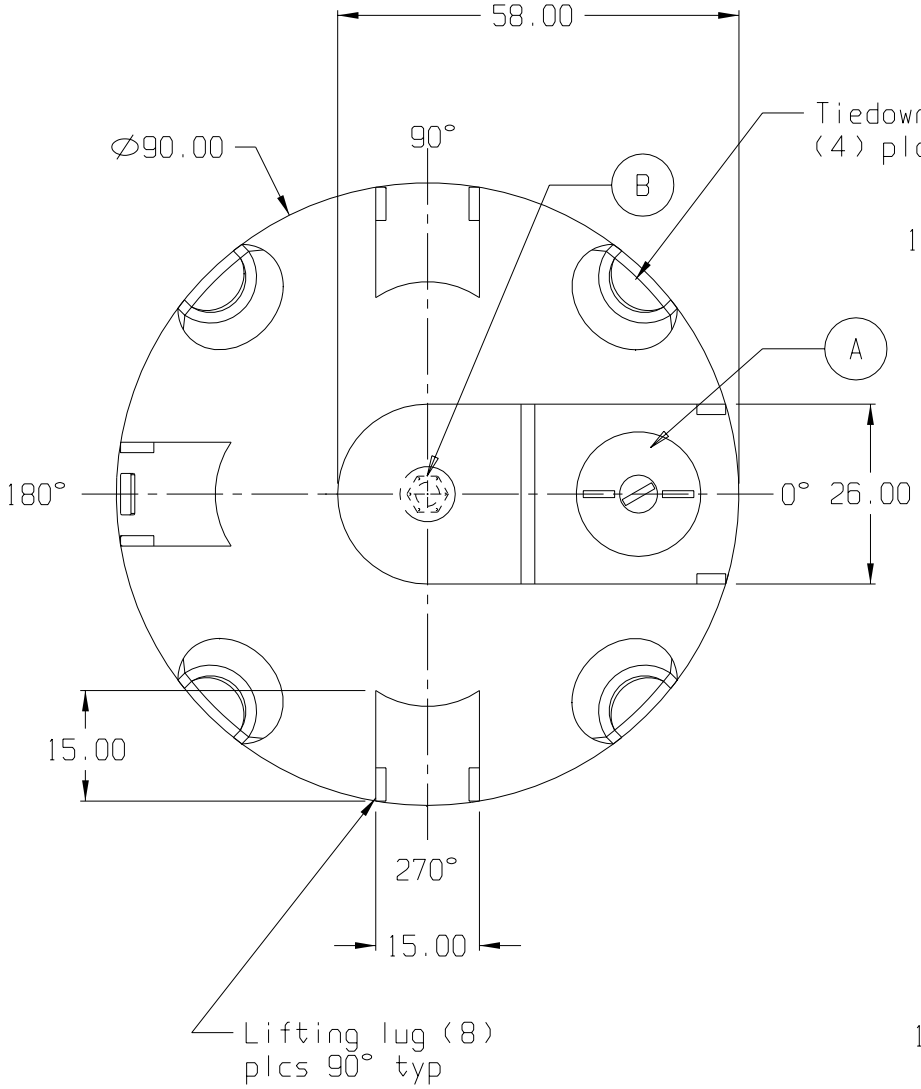

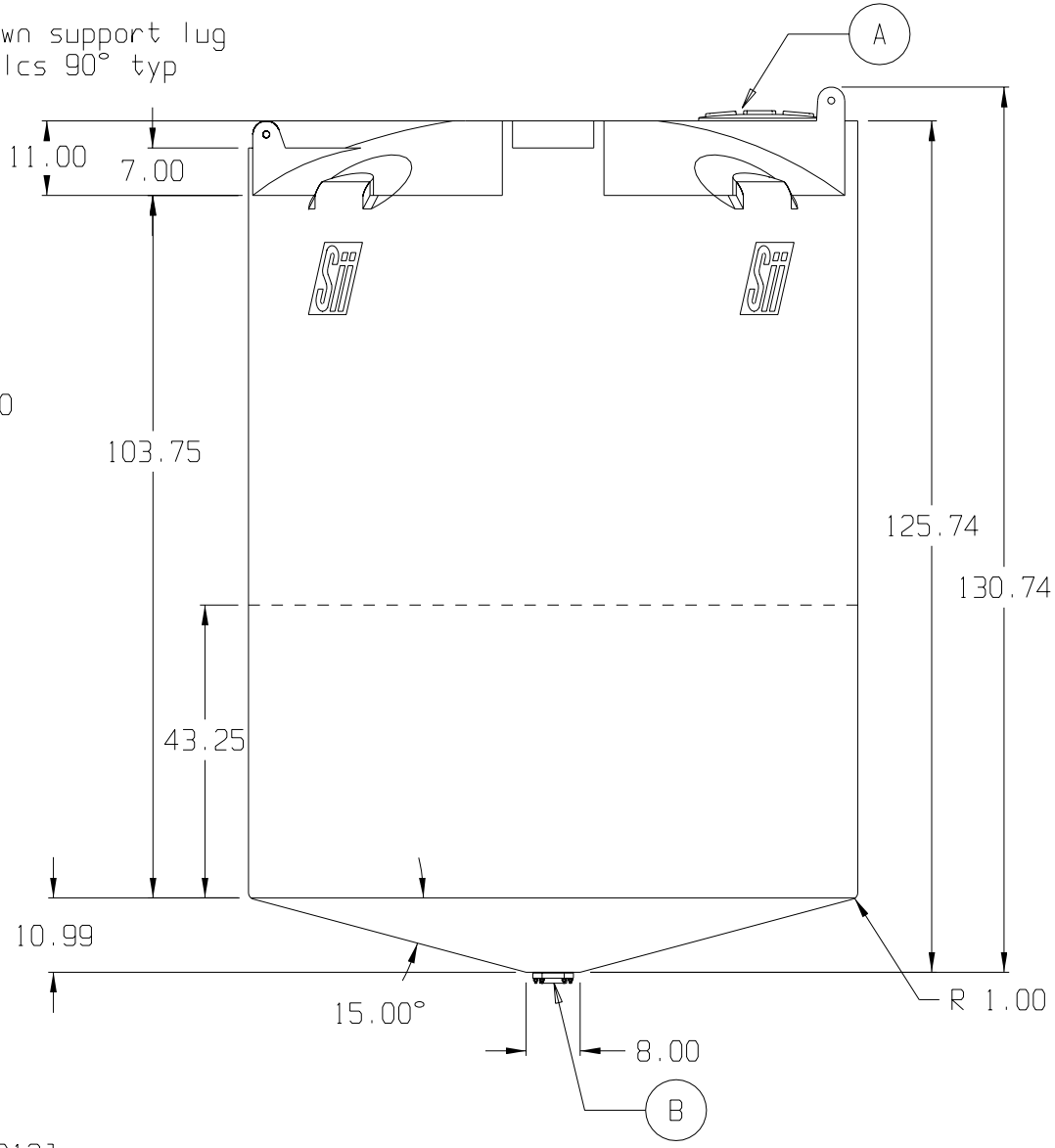

STANDARD OUTLET SPECIFICATION * □ *

A. 18" PE THREADED-VENTED MANWAY W/15" ACCESS [P/N 343012]
B. 3" PP DBL FLANGED BOLTED FTG W/EPDM GASKETS & SS BOLTS [P/N 341105]

BASE FITTINGS TO BE LEFT INSTALLED AT TIME OF SHIPMENT PER SII PROCEDURE

(all dimensions in inches)

3,000 GALLON 15° CONE BOTTOM TANK

PART # TANK: 746--

REF#: 0000 12/04/02

SNYDER INDUSTRIES INC.